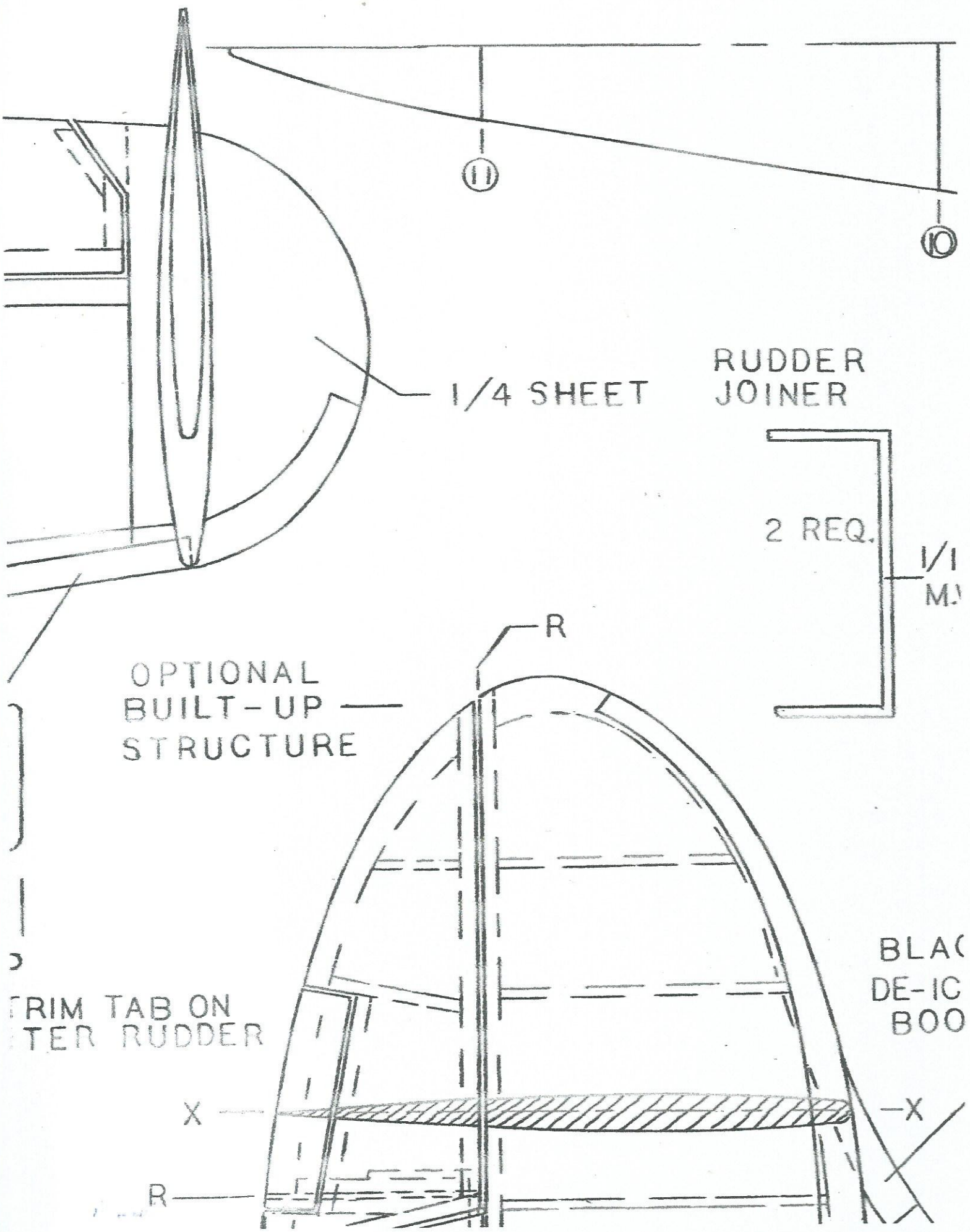
11
10
1/4 SHEET
RUDDER
JOINER
2 REQ.
R
OPTIONAL
BUILT-UP
STRUCTURE
TRIM TAB ON
TER RUDDER
BLA
DE-IC
BOO
X
X
R