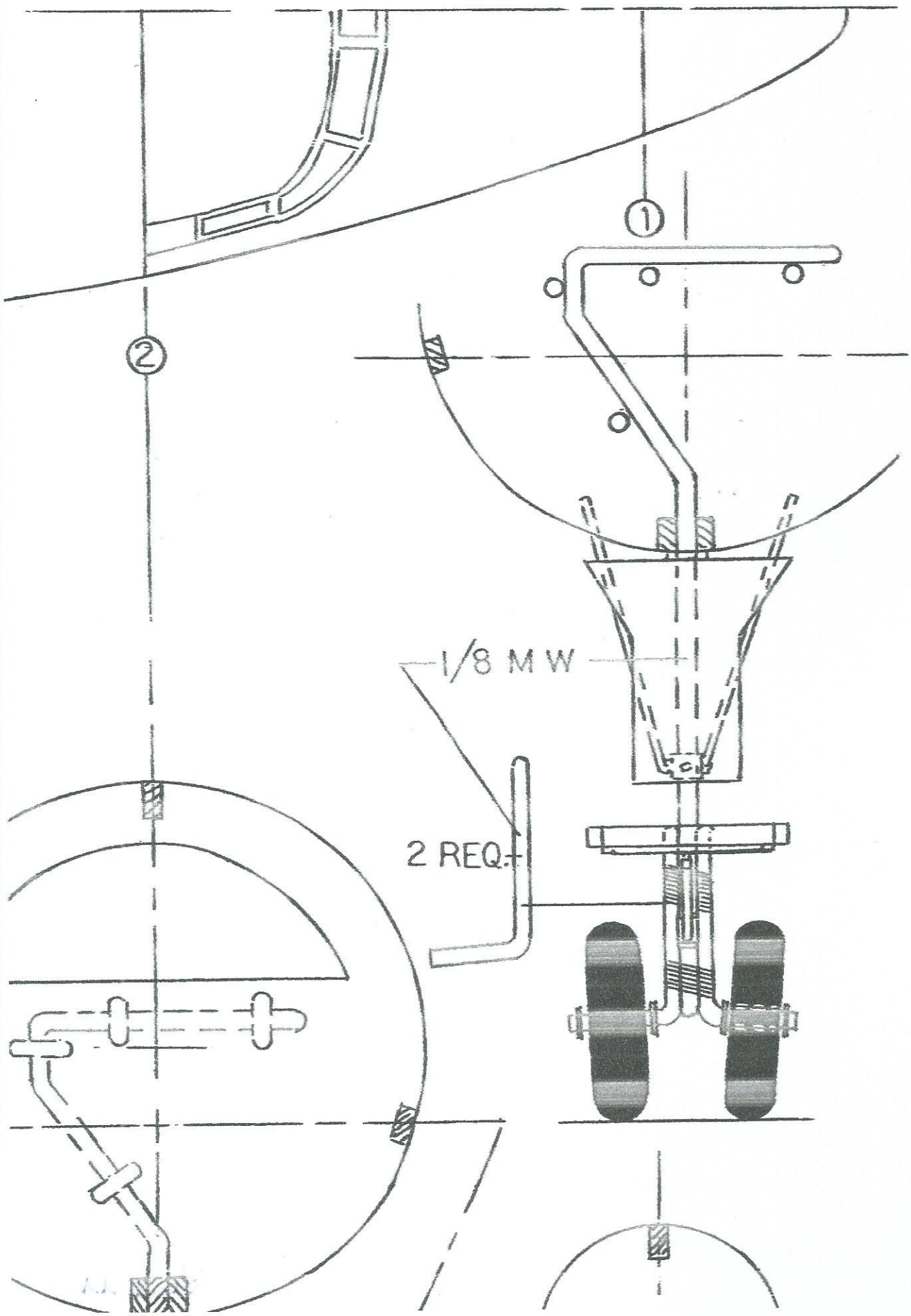
1
2
1/8 M W
2 REQ.